Knief & Co. Gmbh
Am Hansastadion 2
D-28277 Bremen

Tel: +49 - 421 - 163 23 00
Fax: +49 - 421 - 163 23 22
info@kniefco.com
www.kniefco.com

EN 14688

Feel washbasin, freestanding

Article number 0600-022-xx

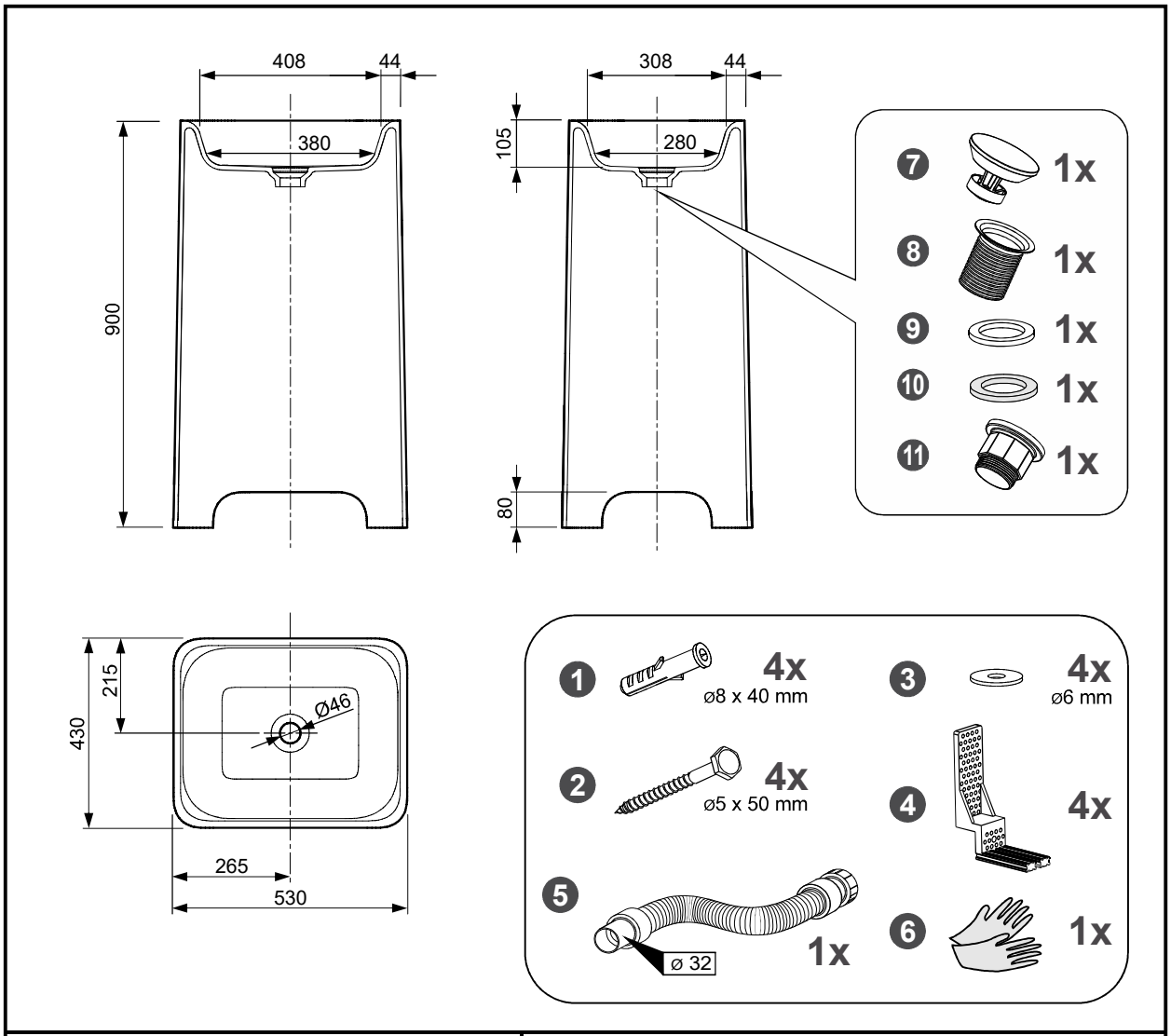

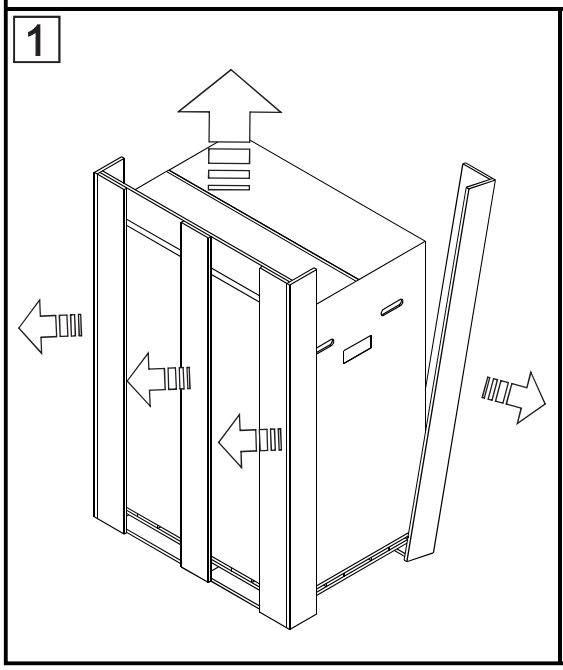

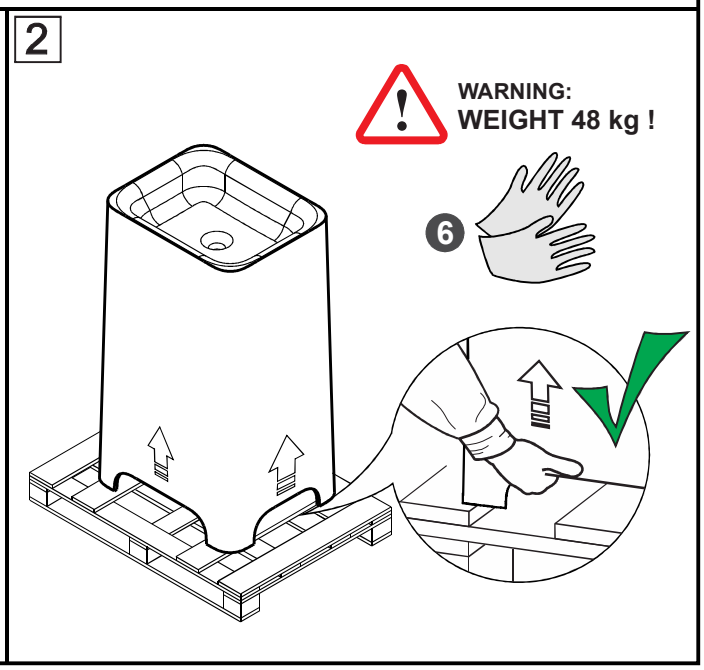

Knief & Co. Gmbh
Am Hansastadion 2
D-28277 Bremen

Tel: +49 - 421 - 163 23 00
Fax: +49 - 421 - 163 23 22
info@kniefco.com
www.kniefco.com

Feel washbasin, freestanding

Article number 0600-022-xx

3

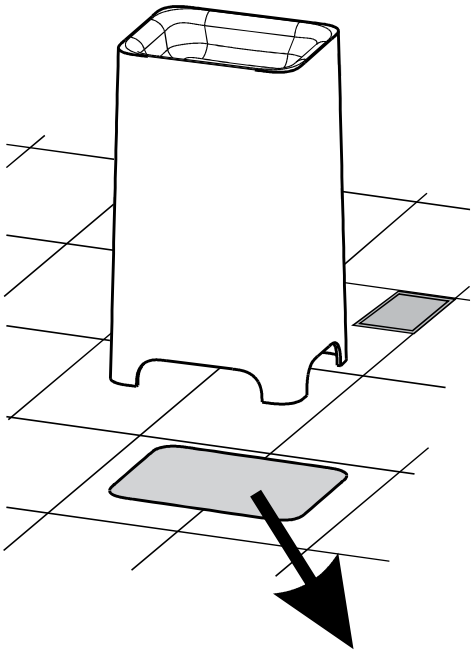

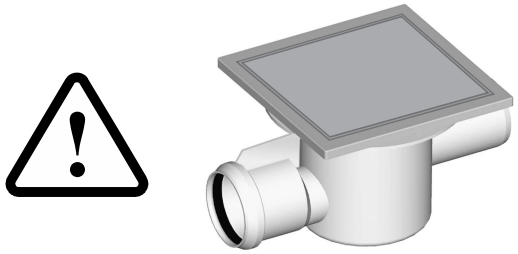

A floor trap must be embedded in the sewer installation !

* Arrange the floor connections on the best possible place depending on the situation at the site, but within the specified dimensions.

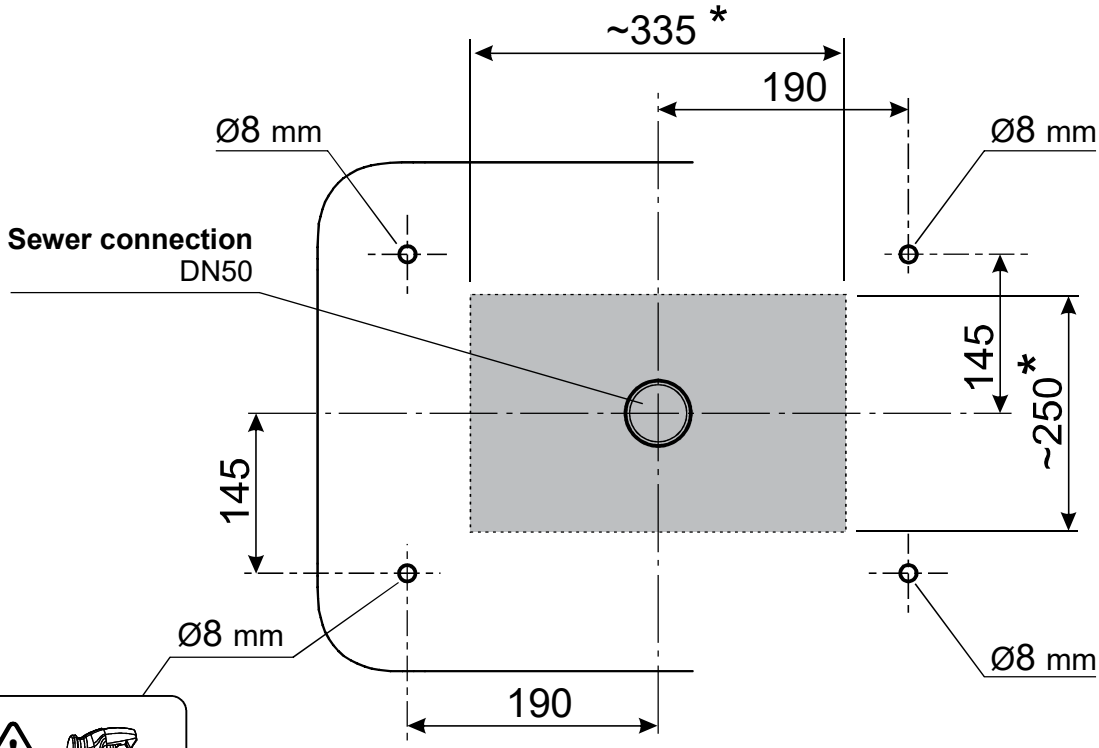

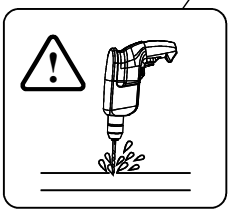

Knief & Co. Gmbh
Am Hansastadion 2
D-28277 Bremen

Tel: +49 - 421 - 163 23 00
Fax: +49 - 421 - 163 23 22
info@kniefco.com
www.kniefco.com

EN 14688

Feel washbasin, freestanding

Article number 0600-022-xx

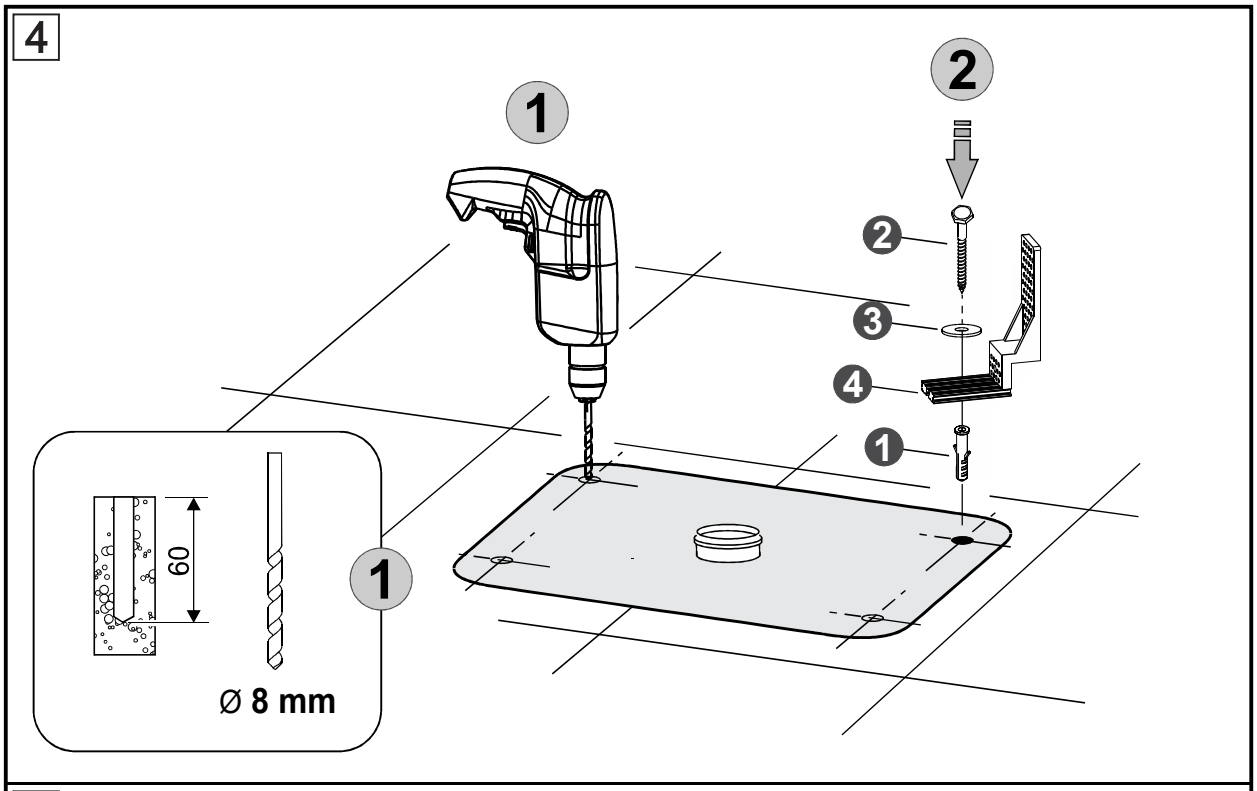

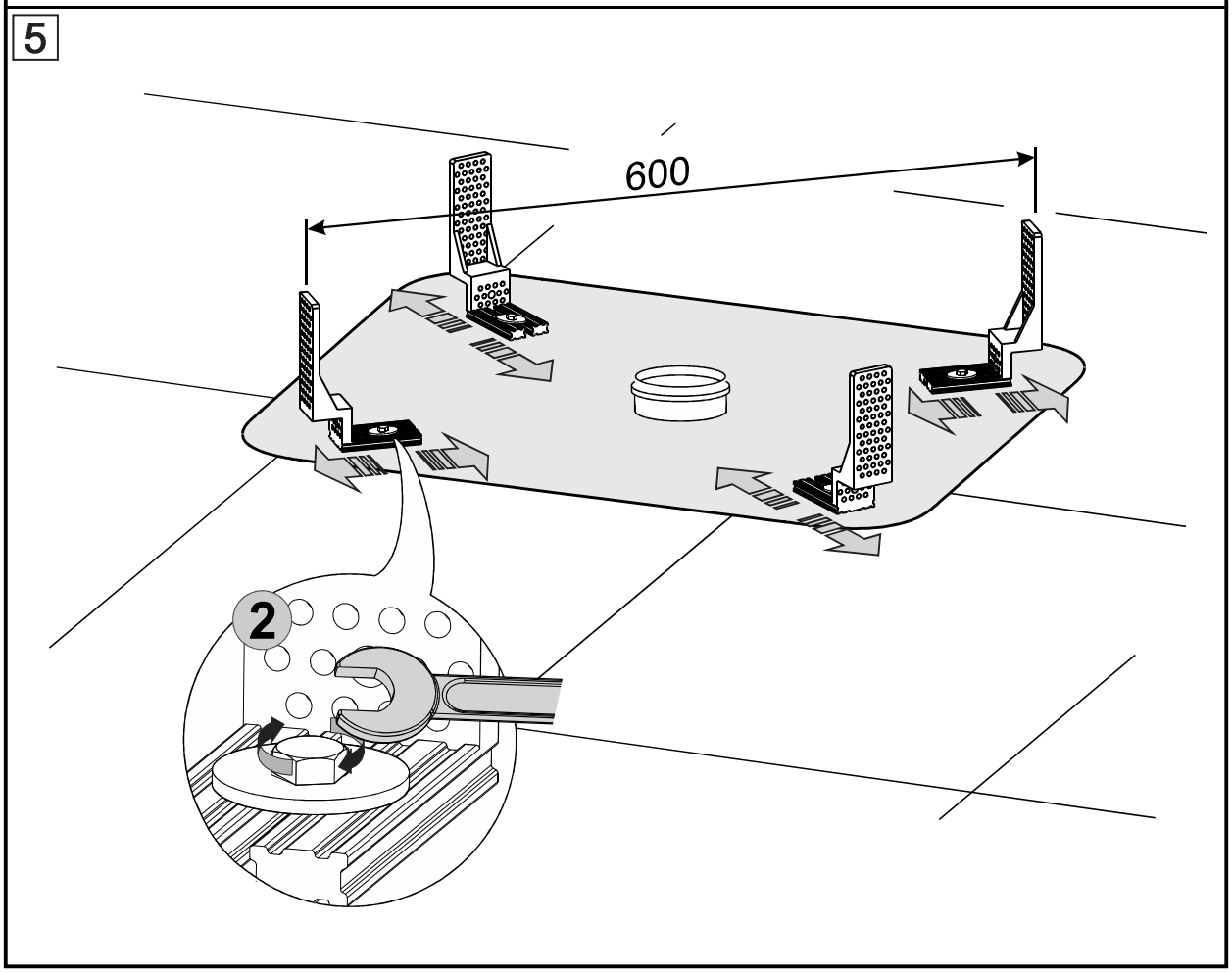

Knief & Co. Gmbh
Am Hansastadion 2
D-28277 Bremen

Tel: +49 - 421 - 163 23 00
Fax: +49 - 421 - 163 23 22
info@kniefco.com
www.kniefco.com

Feel washbasin, freestanding
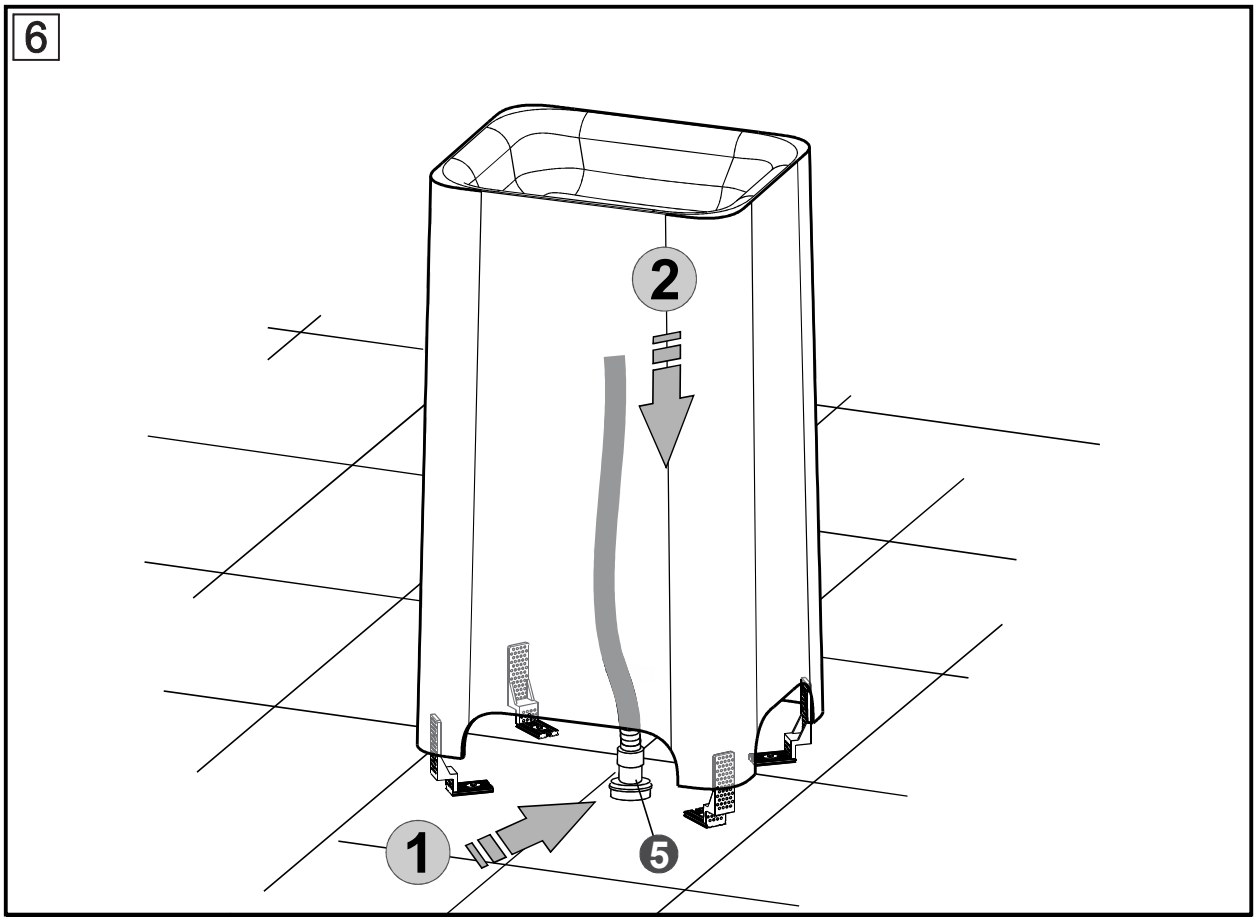
Article number 0600-022-xx